Input Routing

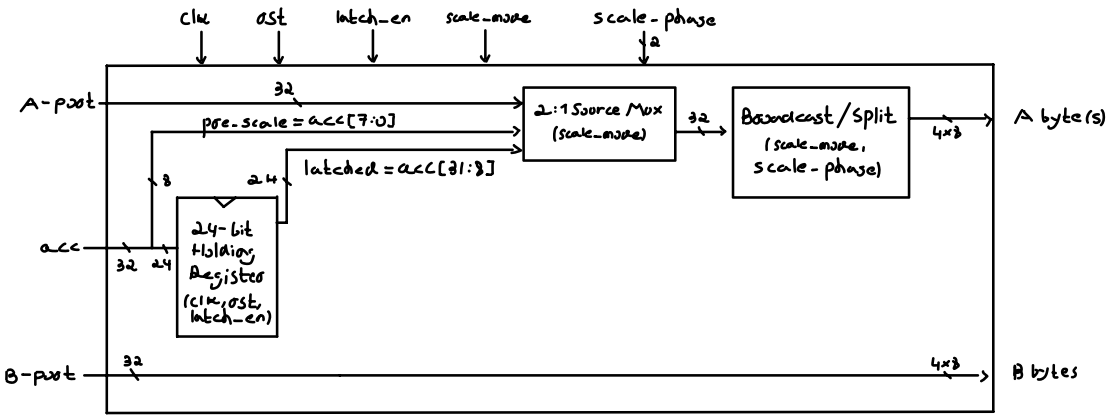

Compute Core

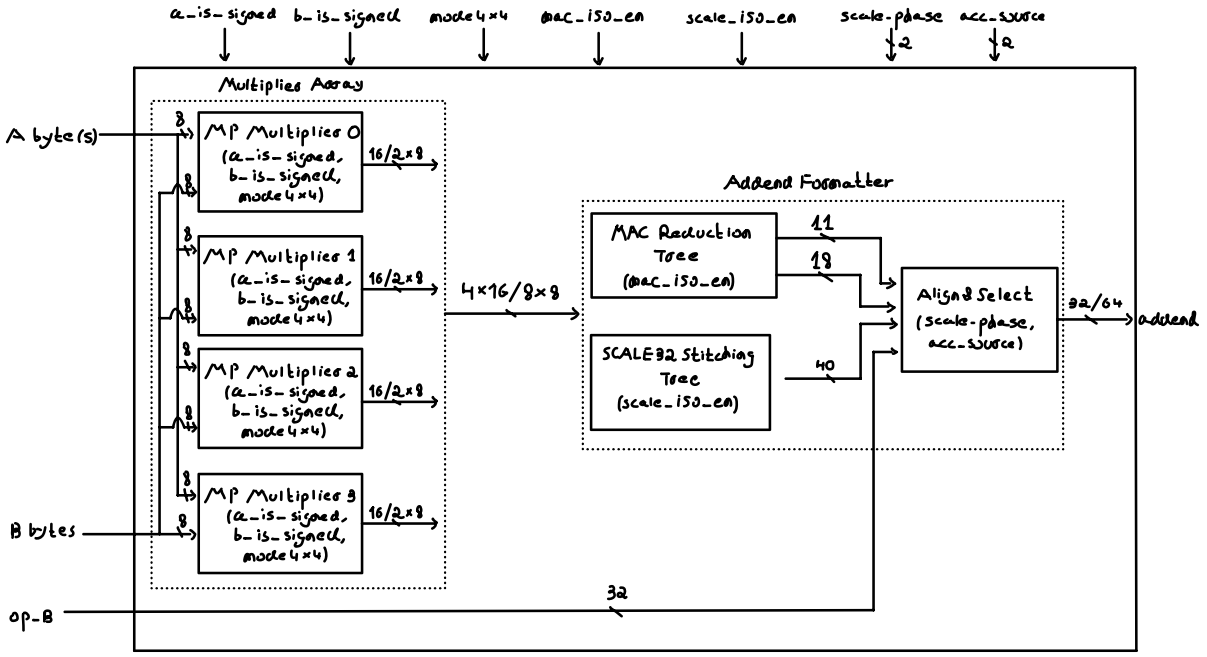
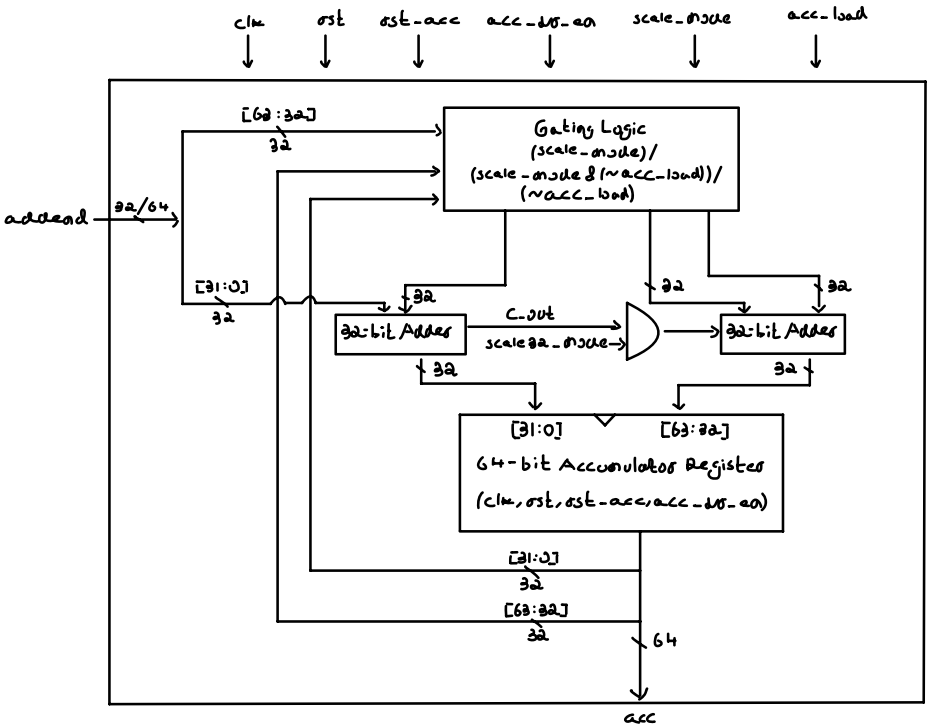
Accumulation Unit